Work Order ID 149972

August 16, 2016 1:48:35 PM

149972

Item ID: 647.2113 **Accept** *N900040100* **Setup Start** *NS1*

Revision ID: **Stop** *NS2*

Item Name: Lower Rail, U-Channel

Start Date: 8/19/2016 **Start Qty:** 5.00 *5*

Required Date: 9/2/2016 **Req'd Qty:** 5.00 *5*

Reference:

Cust Item ID:

Customer:

Approvals: **Process Plan:** SH **Date:** AUG 15 2016 **Tooling:** _____ **Date:** _____

QC: _____ **Date:** _____ **SPC (Y/N):** _____ **Date:** _____

Run Start *NR1*

Stop *NR2*

Sequence ID/ Work Center ID	Operation Description	Set Up/ Run Hours	Tool ID	Tool #	Plan Code	Accept Qty	Reject Qty	Reject Number	Insp. Stamp
Draw Nbr	**Revision Nbr**								
647.2100	D								
100		0.00							
100	BAND SAW					5			16-08-31
Bandsaw	**Memo**	0.07							
Jeaspa Bandsaw	Cut Blank at 9.800"								
110		0.16							JK 16-9-1
110	HAAS CNC VERTICAL MACHINING #1					5			16-08-31
HAAS 1	**Memo**	0.62							
HAAS CNC vertical machine #1	1-Machine per folio FB288 DWG REV: D FOLIO REV: AA								
	2- deburr and break all sharp edges								

DQA: _____ Date: _____

WORK ORDER NON-CONFORMANCE / UPDATE

QA Closed: Date: Work Order update only ☐

Work Order: _____

Part No. _____

NCR No.

DISPOSITION

Rework	☐
Scrap	☐
Use-as-is	☐
Suspected Unapproved	☐

AGAINST DEPARTMENT/PROCESS

Skid-tube	☐	Cross tube	☐	Water Jet	☐	Engineering	☐
Machining	☐	Small Fab	☐	Prod. Eng. Coor.	☐	Quality	☐
Thermoforming	☐	Finishing	☐	Rec/Store/Packaging	☐	Other	☐
Large Fab	☐	Composite	☐	Supplier	☐		☐

Date :	Step #:	QTY Effective :	MRB (QSI042) Approval

Description Work Order Deviation	Disposition	Completed By
		Lead hand / Supervisor Approval Verification
		QC / QA Coordinator Approval

Root Cause

Environment	☐	☐	No Re-verfication
Design	☐	☐	Operator
Doc/Data	☐	☐	Offset/Setup
Equip/Tooling	☐	☐	Supplier
Handling/Pre	☐	☐	Training
Material	☐	☐	Use for Testing
Internal Transport	☐	☐	Poor Information
Tribal Knowledge	☐	☐	Rushing
LOA	☐	☐	Product Improvement
Substation	☐	☐	Process Improvement
Past Expiry Date	☐	☐	Manufacturing Process
Misidentified	☐	☐	Past Due

FAULT CATEGORY

☐ Pressure/Forced	☐ Temperature/Cure	☐ Power Loss/Surge	☐ Positioned Wrong
☐ Bending	☐ Set-up	☐ Folio/Program	☐ Outside Dimensions
☐ Centre Not Concentric	☐ BOM/Route	☐ Grain	☐ Over/Under tolerance
☐ Cracks	☐ Broken/Damage/Defect	☐ Weld	☐ Part Incorrect
☐ Crimp/Kink/Ripple/Wave	☐ Inspection Incomplete/Unqualified	☐ Wrong Stock Pulled	☐ Part Lost/Missing
☐ Cuffs	☐ Contamination	☐ Out of Sequence	☐ Part Moved
☐ Crushing	☐ Countersink	☐ Off-set	☐ Drawing
☐ Heat Treat	☐ Cut Too Short	☐ Mislabeled	☐ Finish
☐ Wave/Twist in Tube	☐ Instructions Incomplete/Unclear	☐ Fit/Function	☐ Misread
☐ Marks/Chatter	☐ Drill Holes	☐ Misaligned/off center	☐ Turning Sequence

☐ OTHER :

Item ID: 647.2113 **Accept** *N9000040100* **Setup Start** *NS1*
Revision ID: **Stop** *NS2*
Item Name: Lower Rail, U-Channel

Start Date: 8/19/2016 **Start Qty:** 5.00 *5*
Required Date: 9/2/2016 **Req'd Qty:** 5.00 *5*
Reference:

Cust Item ID:
Customer:

Run Start *NR1*
Stop *NR2*

Approvals: **Process Plan:** _____ **Date:** _____ **Tooling:** _____ **Date:** _____
QC: _____ **Date:** _____ **SPC (Y/N):** _____ **Date:** _____

Sequence ID/ Work Center ID	Operation Description	Set Up/ Run Hours	Tool ID	Tool #	Plan Code	Accept Qty	Reject Qty	Reject Number	Insp. Stamp
120	QC2- Inspect parts off machine FAI/FAIB	0.00				5			SL 16-9-1 16 08 31
120									
QC	**Memo**	0.01							
Quality Control									
130	QC8- Inspect parts - second check	0.00				5			DAS 14 9-09 16/09/14
130									
QC	**Memo**	0.02							
Quality Control									
140	Outsource process-Anodize per QSI017 4.1.10.1	0.00							
140									
Outsource4	**Memo**	149.99							
Outsource process - Anodize	Issue P/O to ATG : 33672					16-09-15			
	1- Black Anodize as per Dwg 647.2100								
	2- PRIME AS PER DWG, SEE NOTE #2								
	Certification of Comformity is required								

DQA: _____ Date: _____

WORK ORDER NON-CONFORMANCE / UPDATE

QA Closed: Date: Work Order update only ☐

Work Order: _____

Part No. _____

NCR No.

DISPOSITION

Rework	☐
Scrap	☐
Use-as-is	☐
Suspected Unapproved	☐

AGAINST DEPARTMENT/PROCESS

Skid-tube	☐	Cross tube	☐	Water Jet	☐	Engineering	☐
Machining	☐	Small Fab	☐	Prod. Eng. Coor.	☐	Quality	☐
Thermoforming	☐	Finishing	☐	Rec/Store/Packaging	☐	Other	☐
Large Fab	☐	Composite	☐	Supplier	☐		

Date :	Step #:	QTY Effective :	MRB (QSI042) Approval

Description Work Order Deviation	Disposition	Completed By
		Lead hand / Supervisor Approval Verification
		QC / QA Coordinator Approval

Root Cause

Environment	☐	☐	No Re-verfication
Design	☐	☐	Operator
Doc/Data	☐	☐	Offset/Setup
Equip/Tooling	☐	☐	Supplier
Handling/Pre	☐	☐	Training
Material	☐	☐	Use for Testing
Internal Transport	☐	☐	Poor Information
Tribal Knowledge	☐	☐	Rushing
LOA	☐	☐	Product Improvement
Substation	☐	☐	Process Improvement
Past Expiry Date	☐	☐	Manufacturing Process
Misidentified	☐	☐	Past Due

FAULT CATEGORY

☐ Pressure/Forced	☐ Temperature/Cure	☐ Power Loss/Surge	☐ Positioned Wrong
☐ Bending	☐ Set-up	☐ Folio/Program	☐ Outside Dimensions
☐ Centre Not Concentric	☐ BOM/Route	☐ Grain	☐ Over/Under tolerance
☐ Cracks	☐ Broken/Damage/Defect	☐ Weld	☐ Part Incorrect
☐ Crimp/Kink/Ripple/Wave	☐ Inspection Incomplete/Unqualified	☐ Wrong Stock Pulled	☐ Part Lost/Missing
☐ Cuffs	☐ Contamination	☐ Out of Sequence	☐ Part Moved
☐ Crushing	☐ Countersink	☐ Off-set	☐ Drawing
☐ Heat Treat	☐ Cut Too Short	☐ Mislabeled	☐ Finish
☐ Wave/Twist in Tube	☐ Instructions Incomplete/Unclear	☐ Fit/Function	☐ Misread
☐ Marks/Chatter	☐ Drill Holes	☐ Misaligned/off center	☐ Turning Sequence

☐ OTHER :

Item ID: 647.2113 **Accept** *N900040100* **Setup Start** *NS1*
Revision ID: **Stop** *NS2*
Item Name: Lower Rail, U-Channel

Start Date: 8/19/2016 **Start Qty:** 5.00 *5*
Required Date: 9/2/2016 **Req'd Qty:** 5.00 *5*
Reference:

Cust Item ID:
Customer:

Approvals: **Process Plan:** _____ **Date:** _____ **Tooling:** _____ **Date:** _____
QC: _____ **Date:** _____ **SPC (Y/N):** _____ **Date:** _____

Run Start *NR1*
Stop *NR2*

Sequence ID/ Work Center ID	Operation Description	Set Up/ Run Hours	Tool ID	Tool #	Plan Code	Accept Qty	Reject Qty	Reject Number	Insp. Stamp
150	Receive & Inspect for Damage & Mat'l Certs	0.00				5		SP16	9-22
150									
Packaging	**Memo**	0.02							
Packaging									
155	QC5- Inspect part completeness to step on W/O	0.00				(5)			DAS 38 SEP 23 2016
155									
QC	**Memo**	0.02							
Quality Control									
180	Identify as per dwg & Stock Location: CC-083	0.00							SEP 26 2016
180						5			DAS 6 9-26
Packaging	**Memo**	0.01							
Packaging	***IDENTIFY AS PER APICAL MPP-120 BY STAMPING P# AND REV***								

DQA: _____ Date: _____

WORK ORDER NON-CONFORMANCE / UPDATE

QA Closed: Date: Work Order update only ☐

Work Order: _____

Part No. _____

NCR No.

DISPOSITION

Rework	☐
Scrap	☐
Use-as-is	☐
Suspected Unapproved	☐

AGAINST DEPARTMENT/PROCESS

Skid-tube	☐	Cross tube	☐	Water Jet	☐	Engineering	☐
Machining	☐	Small Fab	☐	Prod. Eng. Coor.	☐	Quality	☐
Thermoforming	☐	Finishing	☐	Rec/Store/Packaging	☐	Other	☐
Large Fab	☐	Composite	☐	Supplier	☐		☐

Date :	Step #:	QTY Effective :	MRB (QSI042) Approval

Description Work Order Deviation	Disposition	Completed By
		Lead hand / Supervisor Approval Verification
		QC / QA Coordinator Approval

Root Cause

Environment	☐	☐	No Re-verification
Design	☐	☐	Operator
Doc/Data	☐	☐	Offset/Setup
Equip/Tooling	☐	☐	Supplier
Handling/Pre	☐	☐	Training
Material	☐	☐	Use for Testing
Internal Transport	☐	☐	Poor Information
Tribal Knowledge	☐	☐	Rushing
LOA	☐	☐	Product Improvement
Substation	☐	☐	Process Improvement
Past Expiry Date	☐	☐	Manufacturing Process
Misidentified	☐	☐	Past Due

FAULT CATEGORY

☐	Pressure/Forced	☐	Temperature/Cure	☐	Power Loss/Surge	☐	Positioned Wrong
☐	Bending	☐	Set-up	☐	Folio/Program	☐	Outside Dimensions
☐	Centre Not Concentric	☐	BOM/Route	☐	Grain	☐	Over/Under tolerance
☐	Cracks	☐	Broken/Damage/Defect	☐	Weld	☐	Part Incorrect
☐	Crimp/Kink/Ripple/Wave	☐	Inspection Incomplete/Unqualified	☐	Wrong Stock Pulled	☐	Part Lost/Missing
☐	Cuffs	☐	Contamination	☐	Out of Sequence	☐	Part Moved
☐	Crushing	☐	Countersink	☐	Off-set	☐	Drawing
☐	Heat Treat	☐	Cut Too Short	☐	Mislabeled	☐	Finish
☐	Wave/Twist in Tube	☐	Instructions Incomplete/Unclear	☐	Fit/Function	☐	Misread
☐	Marks/Chatter	☐	Drill Holes	☐	Misaligned/off center	☐	Turning Sequence

☐ OTHER :

Item ID: 647.2113 **Accept** *N900040100* **Setup Start** *NS1*
Revision ID: **Stop** *NS2*
Item Name: Lower Rail, U-Channel
Start Date: 8/19/2016 **Start Qty:** 5.00 *5*
Required Date: 9/2/2016 **Req'd Qty:** 5.00 *5*
Reference:
Cust Item ID:
Customer:

Run Start *NR1*
Stop *NR2*

Approvals: **Process Plan:** _____ **Date:** _____ **Tooling:** _____ **Date:** _____
QC: _____ **Date:** _____ **SPC (Y/N):** _____ **Date:** _____

Sequence ID/ Work Center ID	Operation Description	Set Up/ Run Hours	Tool ID	Tool #	Plan Code	Accept Qty	Reject Qty	Reject Number	Insp. Stamp
190	QC21- Final Inspection - Work Order Release	0.00					DAS 21 9-89		SEP 2 6 2016
190									
QC	**Memo**	0.08							
Quality Control									

DAS 21 9-89 SEP 2 6 2016

DQA: _____ Date: _____

WORK ORDER NON-CONFORMANCE / UPDATE

QA Closed: Date:

Work Order update only ☐

Work Order: _____

Part No. _____

NCR No.

DISPOSITION

Rework	☐
Scrap	☐
Use-as-is	☐
Suspected Unapproved	☐

AGAINST DEPARTMENT/PROCESS

Skid-tube ☐	Cross tube ☐	Water Jet ☐	Engineering ☐
Machining ☐	Small Fab ☐	Prod. Eng. Coor. ☐	Quality ☐
Thermoforming ☐	Finishing ☐	Rec/Store/Packaging ☐	Other ☐
Large Fab ☐	Composite ☐	Supplier ☐	

Date :	Step #:	QTY Effective :	**MRB (QSI042) Approval**

Description Work Order Deviation	**Disposition**	**Completed By**
		Lead hand / Supervisor Approval Verification
		QC / QA Coordinator Approval

Root Cause

Environment ☐	☐ No Re-verfication	Design ☐	☐ Operator
Doc/Data ☐	☐ Offset/Setup	Equip/Tooling ☐	☐ Supplier
Handling/Pre ☐	☐ Training	Material ☐	☐ Use for Testing
Internal Transport ☐	☐ Poor Information	Tribal Knowledge ☐	☐ Rushing
LOA ☐	☐ Product Improvement	Substation ☐	☐ Process Improvement
Past Expiry Date ☐	☐ Manufacturing Process	Misidentified ☐	☐ Past Due

FAULT CATEGORY

☐ Pressure/Forced	☐ Temperature/Cure	☐ Power Loss/Surge	☐ Positioned Wrong
☐ Bending	☐ Set-up	☐ Folio/Program	☐ Outside Dimensions
☐ Centre Not Concentric	☐ BOM/Route	☐ Grain	☐ Over/Under tolerance
☐ Cracks	☐ Broken/Damage/Defect	☐ Weld	☐ Part Incorrect
☐ Crimp/Kink/Ripple/Wave	☐ Inspection Incomplete/Unqualified	☐ Wrong Stock Pulled	☐ Part Lost/Missing
☐ Cuffs	☐ Contamination	☐ Out of Sequence	☐ Part Moved
☐ Crushing	☐ Countersink	☐ Off-set	☐ Drawing
☐ Heat Treat	☐ Cut Too Short	☐ Mislabeled	☐ Finish
☐ Wave/Twist in Tube	☐ Instructions Incomplete/Unclear	☐ Fit/Function	☐ Misread
☐ Marks/Chatter	☐ Drill Holes	☐ Misaligned/off center	☐ Turning Sequence

☐ OTHER :

Picklist Print

August 16, 2016 1:48:35 PM

Work Order ID: 149972 *149972*

Parent Item: 647.2113 *647 2113*

Parent Item Name: Lower Rail, U-Channel

Start Date: 8/19/2016 **Required Date:** 9/2/2016

Start Qty: 5.00 **Required Qty:** 5.00

Comments: IPP REV. A NEW ISSUE JFS 14/03/28 VERIFIED BY: JLM

Component Item ID/ Item Name	Replacement Item ID	Mfg/ Purch	Bin Item	Primary Location	Last Location	Route Seq ID	Unit of Measure	Qty on Hand	Qty per Kit	Total Qty	Qty Issued	Date Issued	Status
M7075T6B1.750X04.500		Purchased	No			100	f	27.9000	0.82	4.315789			

M7075T6B1.750X04.500 **

7075-T6 BAR 1.750" X 4.500"

Location	Loc Qty	Loc Code
MAT006	27.9	
124383	1	
m130585	0.92	
m133829	1.94	
m134164	12	
m134566	12.04	

42'
1.74'
1.65'
4.51'

16-08-31

DQA: _____ Date: _____

WORK ORDER NON-CONFORMANCE / UPDATE

QA Closed: Date: Work Order update only ☐

Work Order: _____

Part No. _____

NCR No.

DISPOSITION

Rework	☐
Scrap	☐
Use-as-is	☐
Suspected Unapproved	☐

AGAINST DEPARTMENT/PROCESS

Skid-tube	☐	Cross tube	☐	Water Jet	☐	Engineering	☐
Machining	☐	Small Fab	☐	Prod. Eng. Coor.	☐	Quality	☐
Thermoforming	☐	Finishing	☐	Rec/Store/Packaging	☐	Other	☐
Large Fab	☐	Composite	☐	Supplier	☐		☐

Date :	Step #:	QTY Effective :	MRB (QSI042) Approval

Description Work Order Deviation	Disposition	Completed By
		Lead hand / Supervisor Approval Verification
		QC / QA Coordinator Approval

Root Cause

Environment	☐	☐	No Re-verification
Design	☐	☐	Operator
Doc/Data	☐	☐	Offset/Setup
Equip/Tooling	☐	☐	Supplier
Handling/Pre	☐	☐	Training
Material	☐	☐	Use for Testing
Internal Transport	☐	☐	Poor Information
Tribal Knowledge	☐	☐	Rushing
LOA	☐	☐	Product Improvement
Substation	☐	☐	Process Improvement
Past Expiry Date	☐	☐	Manufacturing Process
Misidentified	☐	☐	Past Due

FAULT CATEGORY

☐ Pressure/Forced	☐ Temperature/Cure	☐ Power Loss/Surge	☐ Positioned Wrong
☐ Bending	☐ Set-up	☐ Folio/Program	☐ Outside Dimensions
☐ Centre Not Concentric	☐ BOM/Route	☐ Grain	☐ Over/Under tolerance
☐ Cracks	☐ Broken/Damage/Defect	☐ Weld	☐ Part Incorrect
☐ Crimp/Kink/Ripple/Wave	☐ Inspection Incomplete/Unqualified	☐ Wrong Stock Pulled	☐ Part Lost/Missing
☐ Cuffs	☐ Contamination	☐ Out of Sequence	☐ Part Moved
☐ Crushing	☐ Countersink	☐ Off-set	☐ Drawing
☐ Heat Treat	☐ Cut Too Short	☐ Mislabeled	☐ Finish
☐ Wave/Twist in Tube	☐ Instructions Incomplete/Unclear	☐ Fit/Function	☐ Misread
☐ Marks/Chatter	☐ Drill Holes	☐ Misaligned/off center	☐ Turning Sequence

☐ OTHER :

THE INFORMATION CONTAINED IN THIS DRAWING IS THE SOLE PROPERTY OF APICAL INDUSTRIES DBA DART AEROSPACE. ANY REPRODUCTION IN PART OR WHOLE WITHOUT THE WRITTEN PERMISSION OF APICAL INDUSTRIES DBA DART AEROSPACE IS PROHIBITED.

REVISIONS			
REV.	DESCRIPTION	DATE	APPROVED
	LAST PROTOTYPE REVISION: PR2		INC
NC	INITIAL RELEASE	08/05/09	P. BRAVO
A	INCORPORATED ECN 09693, 09961, 09920	04/07/13	P. BRAVO
B	INCORPORATED ECN 09956	07/01/13	P. BRAVO
C	INCORPORATED ECN 05326	02/26/16	P. BRAVO
D	INCORPORATED ECN 05368, 05409, 05494	07/25/16	P. BRAVO

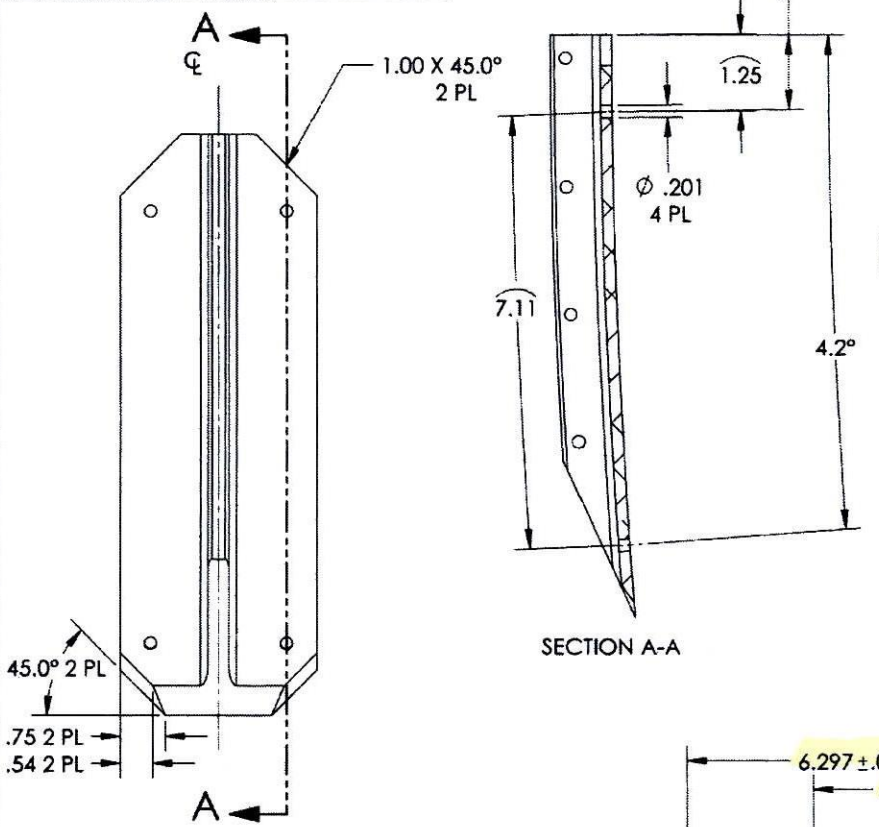

SECTION A-A

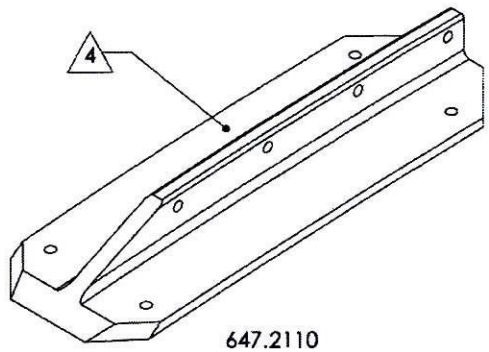

647.2110

NOTES:

1. MATERIAL: ALUMINUM 7075-T651 PER AMS-QQ-A-250/12
2. FINISH IAW MPP-172, SECTION 2.1, 3.3 & 4.3: 1-2 MIL MAX
3. DEBURR AND BREAK ALL SHARP EDGES
4. IDENTIFY IAW MPP-120.
5. HOLE LOCATIONS CONTROLLED BY 647.2110.
6. HOLE LOCATIONS CONTROLLED BY SOLIDWORKS MODEL P/N 647.2114, LAST SAVED 02/29/16.
7. HOLE LOCATIONS CONTROLLED BY SOLIDWORKS MODEL P/N 647.2112.

~~AUG 15 2016~~
SA 16-08-15
149972

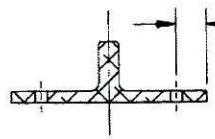

SECTION B-B

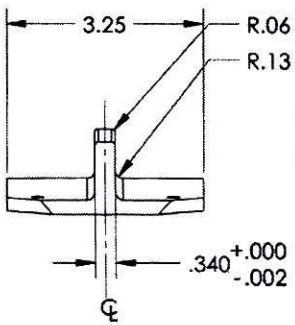

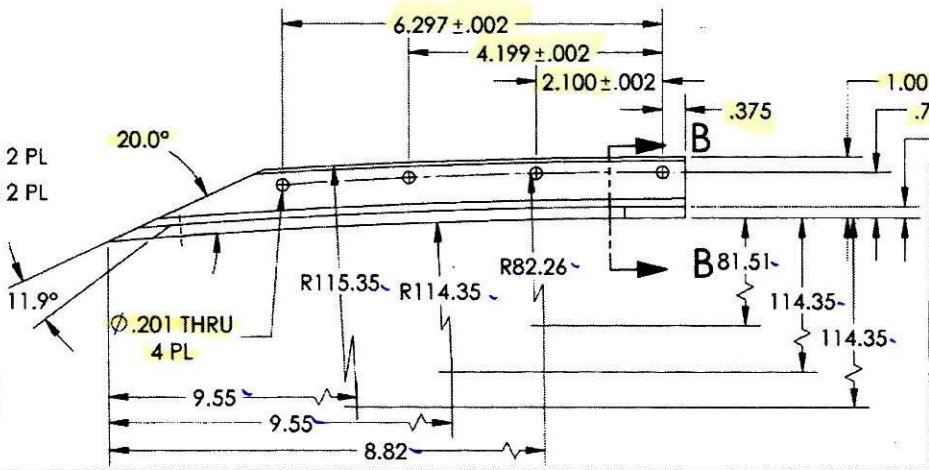

FIND #	PART #	DESCRIPTION	MATL	SPEC
5	647.2114	UPPER U CHANNEL	1	2
4	647.2113	LOWER RAIL	1	2
3	647.2112	UPPER U CHANNEL	1	2
2	647.2111	UPPER RAIL	1	2
1	647.2110	LOWER RAIL	1	2

PARTS LIST

QTY

NEXT ASSY [S]: 645.1700, 647.1300

ORIGINAL DATE (MM/DD/YY): 08/05/09
DRAWN BY: S. HUFF
CHECKED: P. BRAVO
DRAWING APPROVAL: P. BRAVO 08/05/09
CONTRACT NO.:

UNLESS OTHERWISE SPECIFIED DIMENSIONS ARE IN INCHES
TOLERANCES ARE:
2 PLACE DECIMALS ±.01
3 PLACE DECIMALS ±.005
ANGLES ± .5°

DART AEROSPACE
APICAL INDUSTRIES, INC.
dba DART AEROSPACE
3030 ENTERPRISE CT., SUITE A
VISTA, CA. 92081
(760)-724-5300

MOUNTING RAIL

SIZE	CAGE CODE	DWG. NO.	REV.
B	07M26	647.2100	D

SCALE NONE | SHEET 1 OF 5

THE INFORMATION CONTAINED IN THIS DRAWING IS THE SOLE PROPERTY OF APICAL INDUSTRIES DBA DART AEROSPACE. ANY REPRODUCTION IN PART OR WHOLE WITHOUT THE WRITTEN PERMISSION OF APICAL INDUSTRIES DBA DART AEROSPACE IS PROHIBITED.

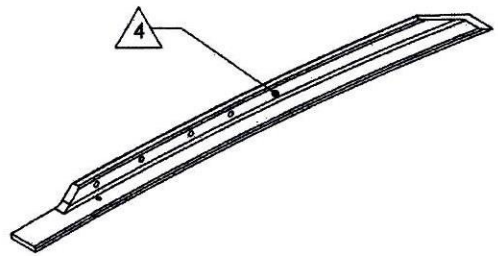

647.2111

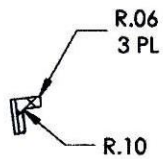

SECTION D-D

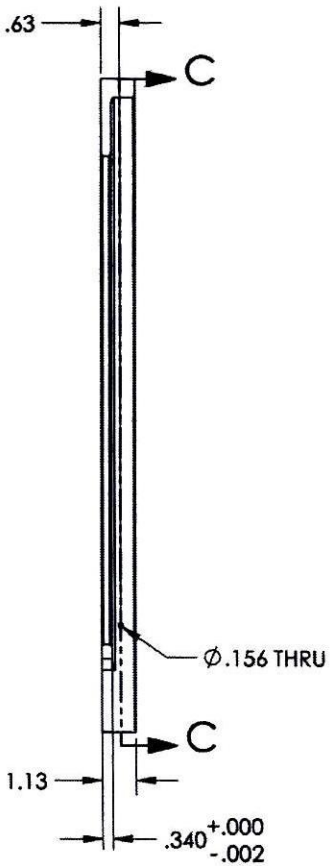

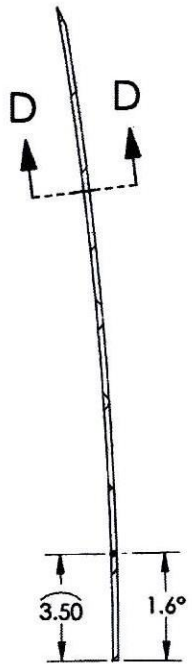

SECTION C-C

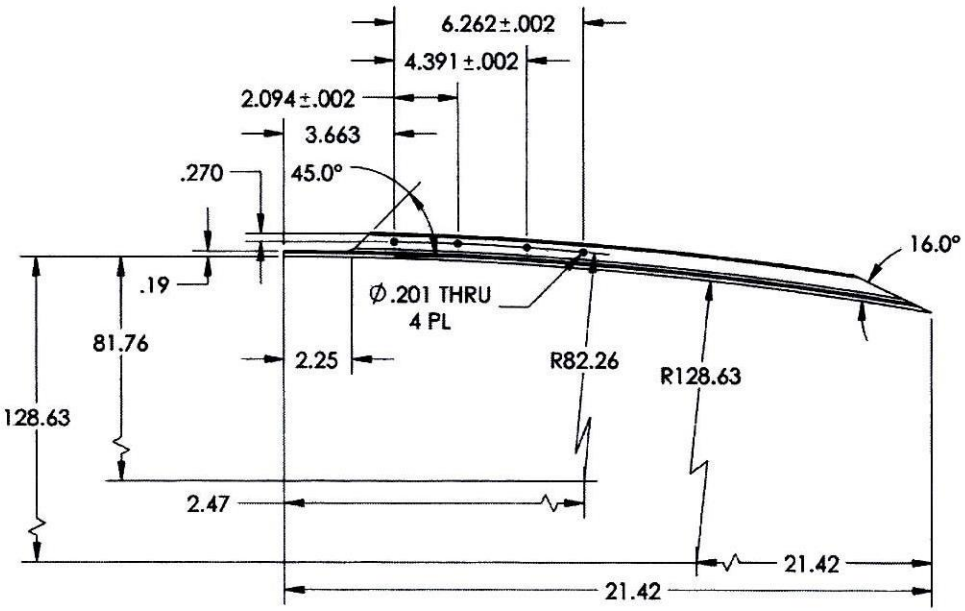

ORIGINAL DATE (MO-DA-YR) 08/05/09		DART AEROSPACE	3030 ENTERPRISE CT., SUITE A VISTA, CA. 92081 (760)-724-5300
DRAWN BY S. HUFF	CHECKER P. BRAVO	APICAL INDUSTRIES, INC. dba DART AEROSPACE	
DRAWING APPROVAL P. BRAVO 08/05/09		MOUNTING RAIL	
CONTRACT NO.			
UNLESS OTHERWISE SPECIFIED DIMENSIONS ARE IN INCHES TOLERANCES ARE: 2 PLACE DECIMALS ±.01 3 PLACE DECIMALS ±.005 ANGLES ± .5°		SIZE B / CAGE CODE 07MZ6 / DWG. NO. 647.2100 / REV. D	
		SCALE NONE	SHEET 2 OF 5

THE INFORMATION CONTAINED IN THIS DRAWING IS THE SOLE PROPERTY OF APICAL INDUSTRIES DBA DART AEROSPACE. ANY REPRODUCTION IN PART OR WHOLE WITHOUT THE WRITTEN PERMISSION OF APICAL INDUSTRIES DBA DART AEROSPACE IS PROHIBITED.

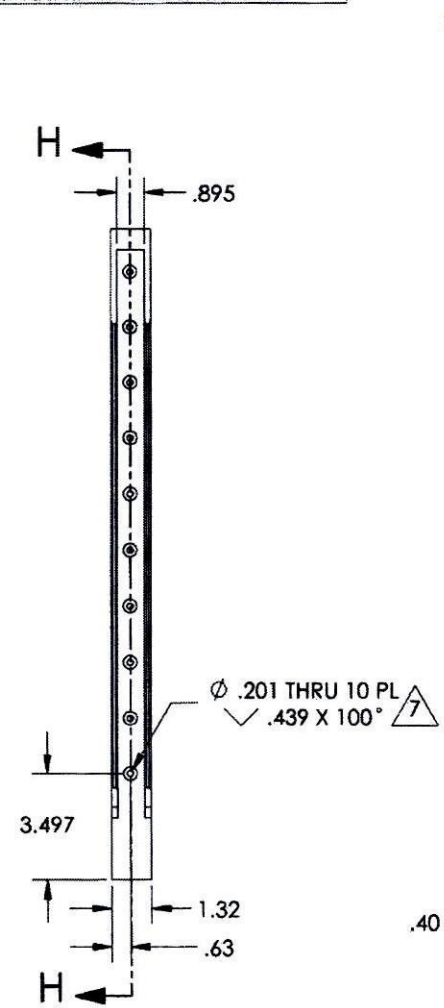

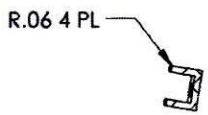

SECTION K-K

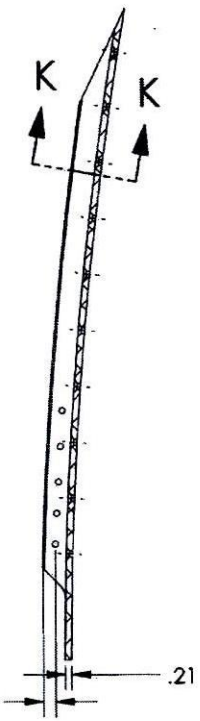

SECTION H-H

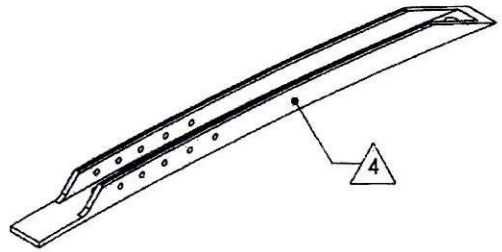

647.2112

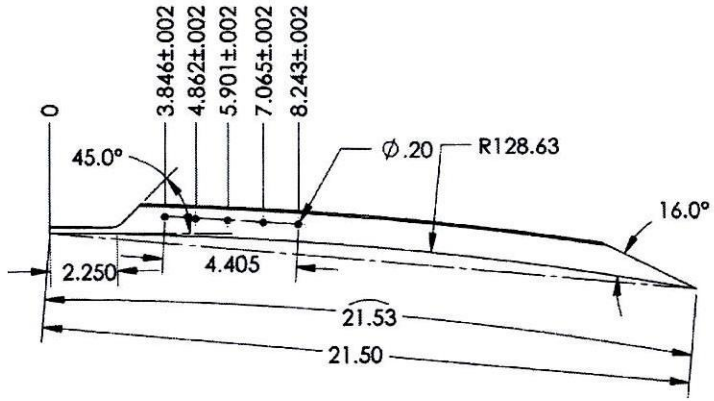

ORIGINAL DATE (MO-DA-YR) 08/05/09		DART AEROSPACE	3030 ENTERPRISE CT., SUITE A VISTA, CA. 92081 (760)-724-5300
DRAWN BY J. HUFF	CHECKED P. BRAVO	APICAL INDUSTRIES, INC. dba DART AEROSPACE	
DRAWING APPROVAL P. BRAVO 08/05/09		MOUNTING RAIL	
CONTRACT No.		SIZE B	CAGE CODE 07MZ6
UNLESS OTHERWISE SPECIFIED DIMENSIONS ARE IN INCHES TOLERANCES ARE: 2 PLACE DECIMALS ±.01 3 PLACE DECIMALS ±.005 ANGLES ± .5°		DWG NO. 647.2100	REV D
		SCALE NONE	SHEET 3 OF 5

THE INFORMATION CONTAINED IN THIS DRAWING IS THE SOLE PROPERTY OF APICAL INDUSTRIES DBA DART AEROSPACE. ANY REPRODUCTION IN PART OR WHOLE WITHOUT THE WRITTEN PERMISSION OF APICAL INDUSTRIES DBA DART AEROSPACE IS PROHIBITED.

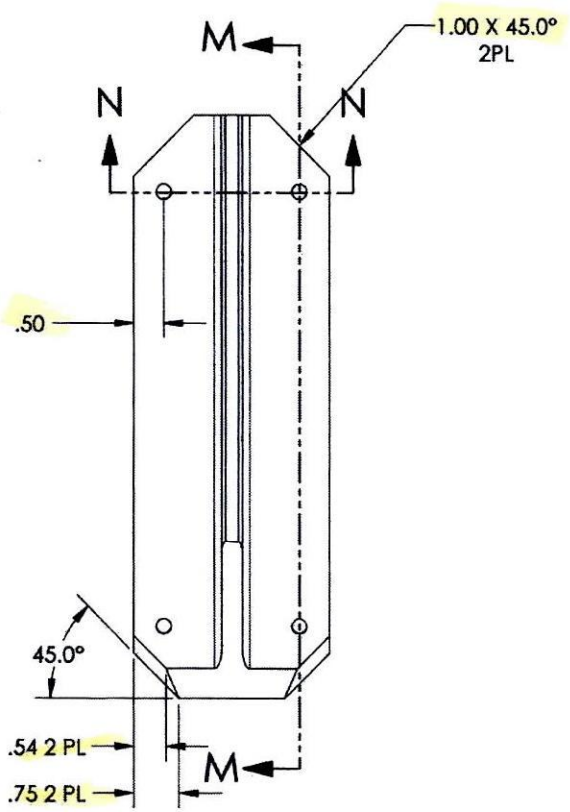

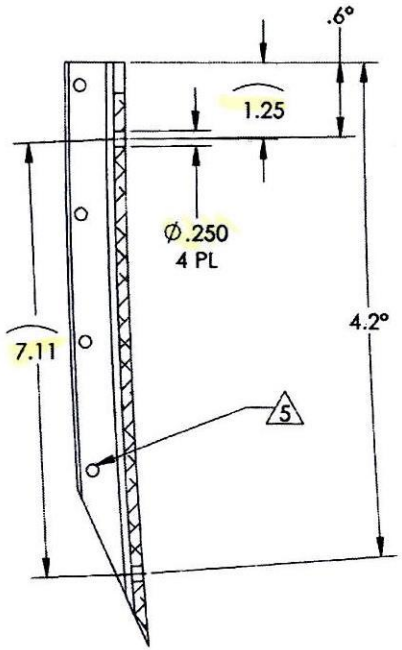

SECTION M-M

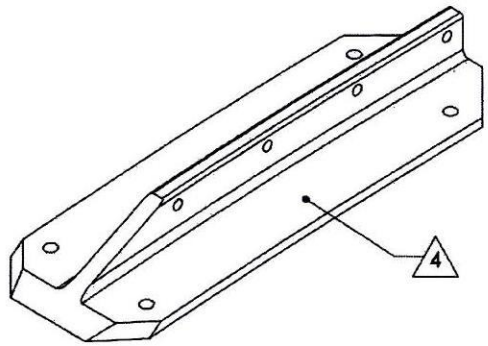

647.2113

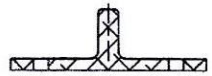

SECTION N-N

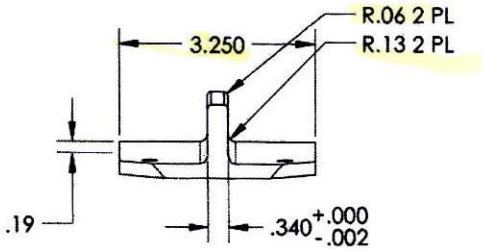

ORIGINAL DATE (MM/DD/YR) 08/05/09		DART AEROSPACE APICAL INDUSTRIES, INC. dba DART AEROSPACE	3030 ENTERPRISE CT., SUITE A VISTA, CA. 92081 (760)-724-5300
DRAWN BY S. ISUFF	CHECKER P. BRAVO		
DRAWING APPROVAL P. BRAVO 08/05/09		MOUNTING RAIL	
CONTRACT No.			
UNLESS OTHERWISE SPECIFIED DIMENSIONS ARE IN INCHES TOLERANCES ARE: 2 PLACE DECIMALS ±.01 3 PLACE DECIMALS ±.005 ANGLES ± .5°		SIZE B / CAGE CODE 07M26 / DWG. NO. 647.2100 / REV. D	
		SCALE NONE	SHEET 4 OF 5

THE INFORMATION CONTAINED IN THIS DRAWING IS THE SOLE PROPERTY OF APICAL INDUSTRIES DBA DART AEROSPACE. ANY REPRODUCTION IN PART OR WHOLE WITHOUT THE WRITTEN PERMISSION OF APICAL INDUSTRIES DBA DART AEROSPACE IS PROHIBITED.

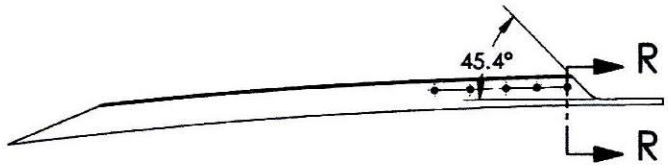

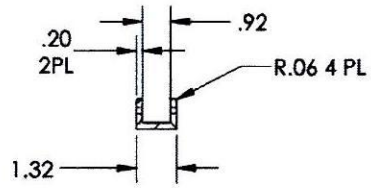

SECTION R-R

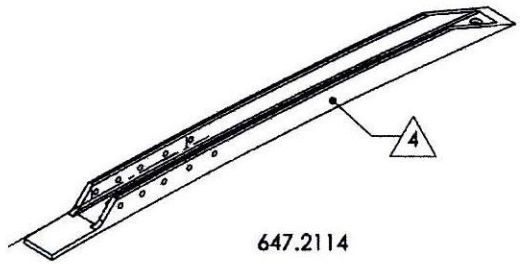

647.2114

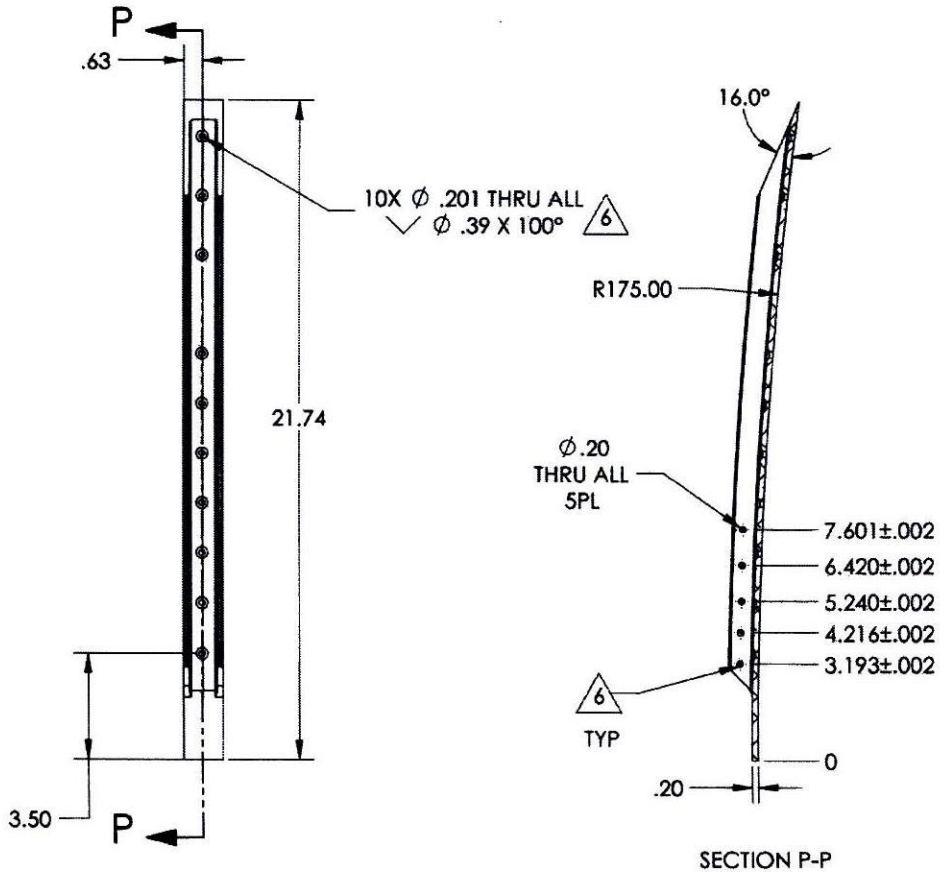

SECTION P-P

ORIGINAL DATE (MM/DD/YY) 08/03/09		DART AEROSPACE	3030 ENTERPRISE CT., SUITE A VISTA, CA. 92081 (760)-724-5300
DRAWN BY S. NUFF	CHECKED P. BRAVO	APICAL INDUSTRIES, INC. dba DART AEROSPACE	
DRAWING APPROVAL P. BRAVO 08/05/09		MOUNTING RAIL	
CONTRACT No.			
UNLESS OTHERWISE SPECIFIED DIMENSIONS ARE IN INCHES TOLERANCES ARE: 2 PLACE DECIMALS ± 01 3 PLACE DECIMALS ± 005 ANGLES ± .5°		SIZE B / CAGE CODE 07MZ6 / DWG. NO. 647.2100 / REV. D	
		SCALE NONE	SHEET 5 OF 5

Reference only
DFS 16/09/01

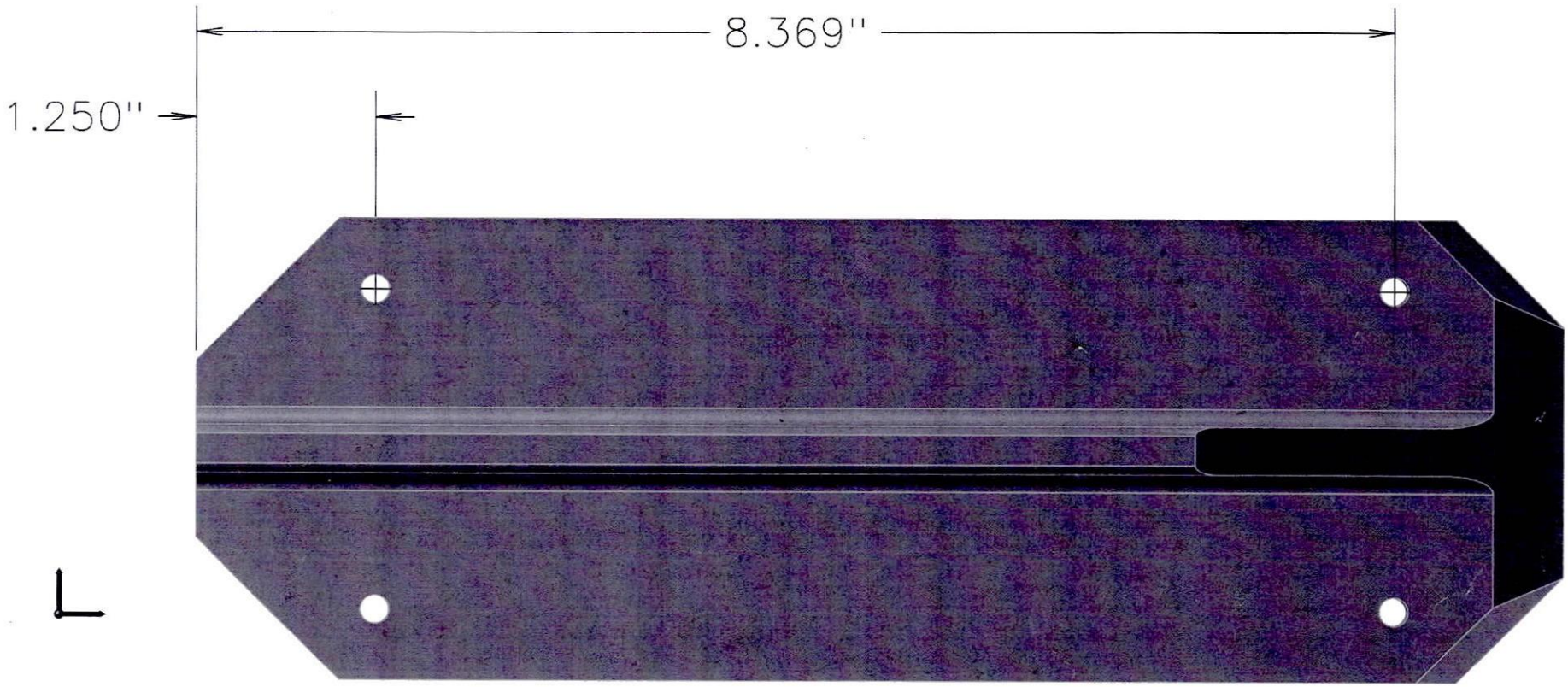

DART AEROSPACE LTD	Work Order:	149972
Description: lower rail, U channel	Part Number:	647.2113
Inspection Dwg: 647.2160 Rev: D		Page 1 of 1

INSPECTION SHEET

Drawing Dimension	Tolerance	Actual Dimension	Accept	Reject	Method of Inspection	Comments
.375	± .005	.376	✓			
2.100	± .002	2.100	✓			
4.199	± .002	4.1988	✓			
6.297	± .002	6.296	✓			
.750	± .005	.752	✓			
1.00	± .010	1.000	✓		VERN	SL-10
.19	± .010	.189	✓			
Ø.201	+.005 -.001	.202	✓			
20°	± .5°	20°	✓		protractor VERN	
.50	± .010	.499	✓			
.54	± .010	.540	✓			
.75	± .010	.750	✓			
Ø.250	+.005 -.001	.251	✓			
1.250	± .010	1.249	✓			
~~4.N~~	~~± .010~~	~~4.N~~	✓		N/A	
3.250	± .005	3.248	✓			
R.06	± .010	.063	✓			
R.13	± .010	.125	✓			
.340	+0 -.002	.339	✓		mic	SL-4

Measured by:	SL	Checked by:	DAS 14 9:39	QC Inspector:	
Date:	16-07-31	Date:	16/09/14	Date:	

Engineering Approval: (If necessary)		Date:	

Rev	Date	Change	Revised by	Approved
B	14.07.31	New Issue	KJ	

Jean Francois Sauve

From: Jacob Becker
Sent: September-08-16 11:15 AM
To: Jean Francois Sauve
Subject: RE: 647.2113

Hi JF,

I thought I replied to this saying it was acceptable.

Well, it's acceptable! haha

Let me know if you need anything else.

Regards,

JACOB BECKER
Technical Support/Project Engineering

DART AEROSPACE
T 1 760 509-1639
F 1 760 758-9612
1-800-566-4166

From: Jean Francois Sauve
Sent: Thursday, September 08, 2016 8:13 AM
To: Jacob Becker <JBecker@dartaero.com>
Cc: Pablo Bravo <pbravo@dartaero.com>; Jean-Luc Menard <jmenard@dartaero.com>
Subject: RE: 647.2113

Any news on this?

JF.

From: Jean Francois Sauve
Sent: September-01-16 3:47 PM
To: Jacob Becker <JBecker@dartaero.com>
Cc: Pablo Bravo <pbravo@dartaero.com>
Subject: 647.2113

Hi Jacob,

I have a non-conforfance on 647.2113 Upper U Channel. Dimension circled below is under tolerance by 0.002", currently at 0.336".One part is affected.

Let me know if it's acceptable.

Thanks

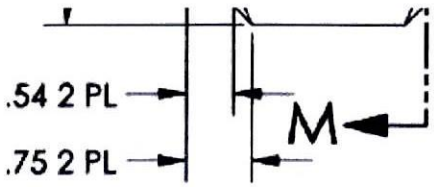

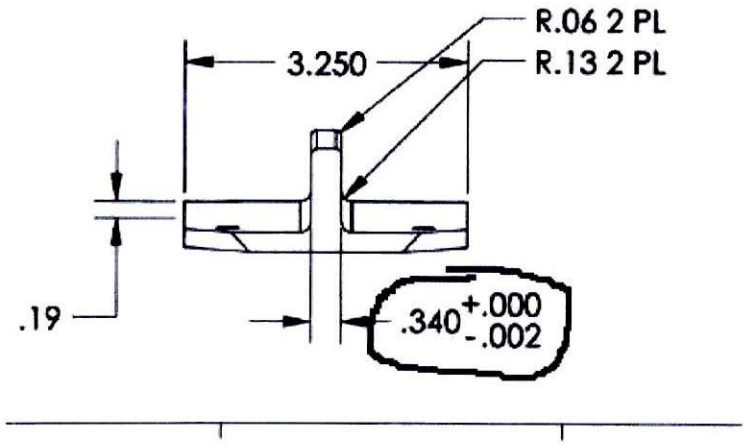

JEAN-FRANÇOIS SAUVÉ
Production Engineering Coordinator

DART AEROSPACE
T 1 613 632-5200 > 237
F 1 613 632-5246
1 800 556- 4166
www.dartaerospace.com

Dart Aerospace Ltd.
1270 Aberdeen Street
Hawkesbury, ON K6A 1K7
Tel: 613 632 9577
Fax: 613 632 1053

PURCHASE ORDER

Purchase Order ID PO33672

Purchase Order Date 9/15/2016
PO Print Date 9/22/2016

Order From : VC-ATG001

A.T.G. INDUSTRIES INC.
731 INDUSTRIELLE ROAD
ROCKLAND, ON K4K 1T2
CANADA

Ship To : DART AEROSPACE LTD

1270 ABERDEEN
HAWKESBURY, ON K6A 1K7
CANADA

Contact Name
Vendor Phone 613-446-4544

Ship To Contact
Ship To Phone
Ship Via: VENDOR'S TRUCK
Ship Acct:

Buyer Linda Lacelle
Customer POID
Customer Tax # 10127-2607
Terms Net 30
Currency CAD
FOB FCA – (Free Carrier)

3	150274	647.0116 DOUBLER REV. A	9/23/2016	6.00		$7.40	$44.40
			Yes				
			9/23/2016				

FINISH: HARD BLACK ANODIZE AS PER IAW MIL-A-8625 TYPE III, CLASS 2 / PRIME AS PER IAW MIL-P-23377J TYPE 1 CLASS N

Line Total: **$44.40**

4	149972	647.2113 LOWER RAIL REV. D	9/23/2016	5.00		$11.60	$58.00
			Yes				
			9/23/2016				

FINISH: HARD BLACK ANODIZE AS PER IAW MIL-A-8625 TYPE III, CLASS 2 / PRIME AS PER IAW MIL-P-23377J TYPE 1 CLASS N

Line Total: **$58.00**

5	144606	D4838-2 UPPER CUTTER REV. A	9/23/2016	6.00		$10.25	$61.50
			Yes				
			9/23/2016				

FINISH: HARD BLACK ANODIZE AS PER IAW MIL-A-8625 TYPE III, CLASS 2 / PRIME AS PER IAW MIL-P-23377J TYPE 1 CLASS N

Note:

A.T.G. INDUSTRIES INC.
731 INDUSTRIELLE STREET
ROCKLAND, ON K4K 1T2
Canada

Ph: (613) 446-4544 Fax: (613) 446-4556

Pack List

Number: 912285 Date: 22-Sep-16

To

Dart Aerospace Ltd
1270 Aberdeen St
Hawkesbury, ON K6A 1K7

Ph: 613 632-9577 Fax: 613 632-1053

Ship To

CHANTAL LAVOIE
Dart Aerospace Ltd
1270 Aberdeen St
Hawkesbury, ON K6A 1K7

Ph: 613 632-9577 Fax: 613 632-1053

Terms	Ship Via

Quantity	Description
	PLEASE REFERENCE THE PACK LIST NUMBER ON ALL CORRESPONDENCE TO THIS SHIPMENT. IF YOU HAVE ANY QUESTIONS, PLEASE CALL AT (613) 446-4544.
1 ea	Part: 646.3313 Rev: Hard Anodize, Type III, Class 2 (MIL-A-8625) Primer, MIL-P-23377J, TYPE 1, CLASS N Job: 20137 PO: PO33672 Line: 1
6 ea	Part: D4824-1 Rev: Hard Anodize, Type III, Class 2 (MIL-A-8625) Primer, MIL-P-23377J, TYPE 1, CLASS N Job: 20138 PO: PO33672 Line: 2
6 ea	Part: 647.0116 Rev: Hard Anodize, Type III, Class 2 (MIL-A-8625) Primer, MIL-P-23377J, TYPE 1, CLASS N Job: 20139 PO: PO33672 Line: 3
5 ea	Part: 647.2113 Rev: 16-9-22 Hard Anodize, Type III, Class 2 (MIL-A-8625) Primer, MIL-P-23377J, TYPE 1, CLASS N Job: 20140 PO: PO33672 Line: 4
6 ea	Part: D4838-2 Rev: Hard Anodize, Type III, Class 2 (MIL-A-8625) Primer, MIL-P-23377J, TYPE 1, CLASS N Job: 20141 PO: PO33672 Line: 5
1	Part: ADMINISTRATION FEE Rev: N/A

A.T.G. INDUSTRIES INC.
731 INDUSTRIELLE STREET
ROCKLAND, ON K4K 1T2
Canada

Ph: (613) 446-4544 Fax: (613) 446-4556

Pack List

Number: 912285 Date: 22-Sep-16

To

Dart Aerospace Ltd
1270 Aberdeen St
Hawkesbury, ON K6A 1K7

Ph: 613 632-9577 Fax: 613 632-1053

Ship To

CHANTAL LAVOIE
Dart Aerospace Ltd
1270 Aberdeen St
Hawkesbury, ON K6A 1K7

Ph: 613 632-9577 Fax: 613 632-1053

Terms	Ship Via

Quantity	Description
ea	ADMINISTRATION FEE Job: 20142 PO: PO33672 Line: 7
4 ea	Part: 649.4816 Rev: B Doubler Hard Anodize, Type III, Class 2 (MIL-A-8625) Primer, MIL-P-23377J, TYPE 1, CLASS N Job: 20143 PO: PO33672 Line: 8

DATE : 22/9/16

CERTIFIED SIGNATURE : [signature]

RECEIVER SIGNATURE : [signature] 22-9-16

Note: This Packing Slip may contain parts that have been PLATED. Items that are plated may be subject to natural tarnishing and it is suggested that they be inspected within 24 hours of receipt.

CERTIFICATE OF CONFORMANCE

A.T.G. INDUSTRIES INC. CERTIFIES THAT ALL ITEMS IN THIS SHIPMENT CONFORM TO REQUIREMENTS.

MADE IN CANADA.